KOOL-IT

Project name:	
Location:	
Item:	Qty :
Model:	

Single Door Series
Refrigerator / Freezer
Top Mount Compressor

KTSR-1 / KTSF-1

Durable Design

- Stainless steel interior & exterior
- 3 height adjustable, heavy-duty, PE coated wire shelves
- Incandescent interior lighting
- Digital temperature display
- Door lock with key
- Simple plug-in installation
- Field reversible door

Energy Efficient

- Self-closing door with stay open feature
- Seals tight with magnetic vinyl gasket
- Open door alert beeps when door is open for 5 minutes
- Foamed-in place high-density polyurethane insulated body, CFC-Free
- Large evaporator & condenser for quick cooling and greater efficiency

Superior Quality

- Designed for mobility, reliability & efficiency in commercial kitchens
- Certified with ETL & Energy Star guaranteeing quality standards and energy efficiency
- 4" swivel castors with 2 front brakes
- Easy grip handle
- Entirely self-contained system
- Automatic defrost system
- Digitally controlled temperature system
- Accomodates full-size bun sheet pans
- Easily adjustable shelf height
- Internal storage capacity is 20.5 cu.ft.
- NEMA 5-15 plug
- Compressor : Refrigerator - 1/3 HP / Freezer - 1/2 HP
- Holding temperature : Refrigerator 33°F to 39°F / Freezer 5°F to -9.4°F

MVP GROUP
Tel.: 514.737.9701 / Toll Free: 888.275.4538
Fax: 514.342.3854 / Toll Free: 877.453.8832
sales@mvpgroupcorp.com **www.mvpgroupcorp.com**

KTSR-1 / KTSF-1

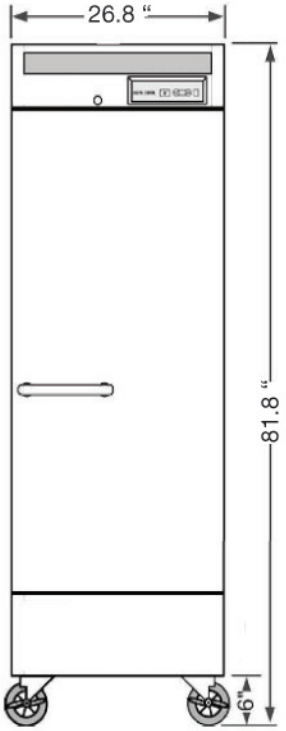

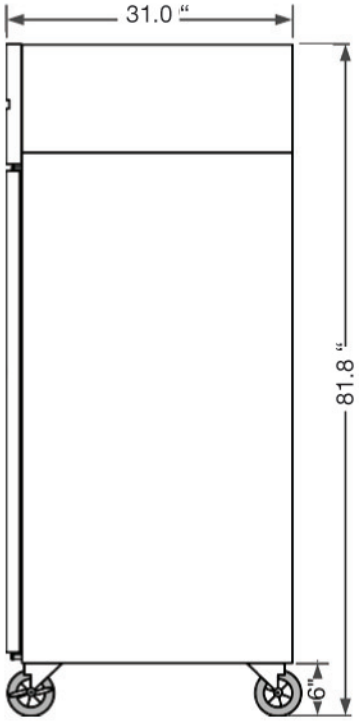

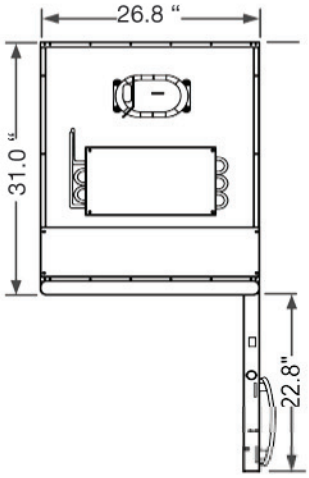

Model Number	Description	Interior/ Exterior Material	Number of Doors	Number of Shelves	Capacity (cubic feet)	Exterior Dimensions (WxDxH in.)	Compressor Size	Voltage/ Frequency	Amps	Working Temp.	Refrigerant	Ship Weight (lbs.)
KTSR-1	Top Mount Single Door Refrigerator	Stainless Steel	1	3	20.5	26.8 x 31.0 x 81.8	1/3	115V 60 Hz	5.0	33°F to 39°F	R134a	315
KTSF-1	Top Mount Single Door Freezer	Stainless Steel	1	3	20.5	26.8 x 31.0 x 81.8	1/2	115V 60 Hz	8.0	5°F to -9.4°F	R404a	328

These units are designed for maximum performance in an air-conditioned area of 75°F ambient temperature and 55% relative humidity.There must be adequate ventilation at the top, sides & rear of the unit for proper operation.

Warranty : 18 months parts & labor. Additional 42 months on compressor (part only)

KOOL-IT is a registered trade mark of MVP Group.
Specifications subject to change without notice.

MVP GROUP
Tel.: 514.737.9701 / Toll Free: 888.275.4538
Fax: 514.342.3854 / Toll Free: 877.453.8832
sales@mvpgroupcorp.com **www.mvpgroupcorp.com**