Blue Line

Walk In Coolers and Freezers by Arctic

MODEL: BL1012–CF

COOLER 35°

REMOTE PRE–ASSEMBLED REFRIGERATION

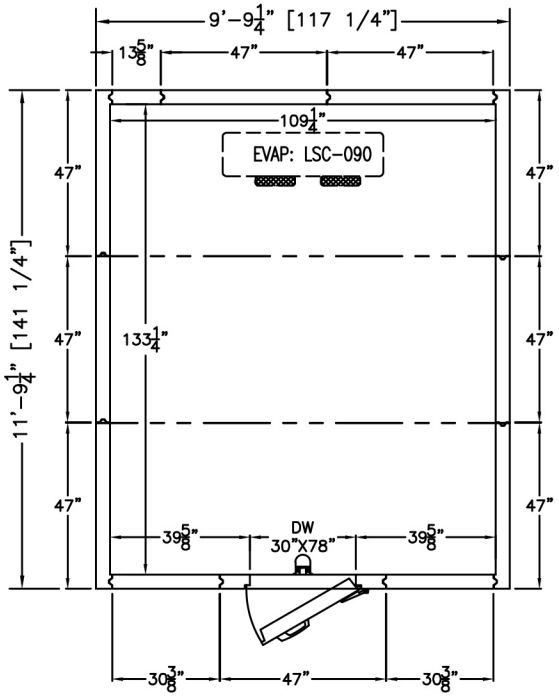

PLAN VIEW

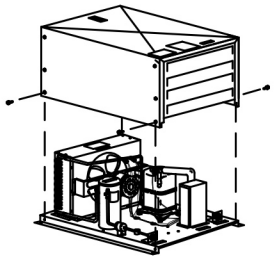

CONDENSING UNIT DETAIL

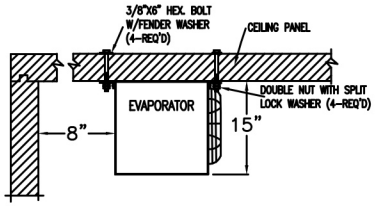

EVAPORATOR MOUNTING DETAIL

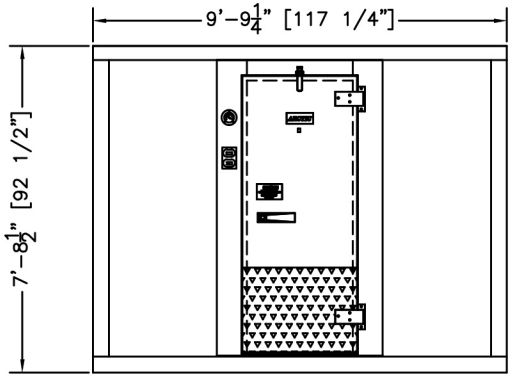

ELEVATION

SHOWN W/ RIGHT HINGE (LEFT HINGE AVAILABLE)

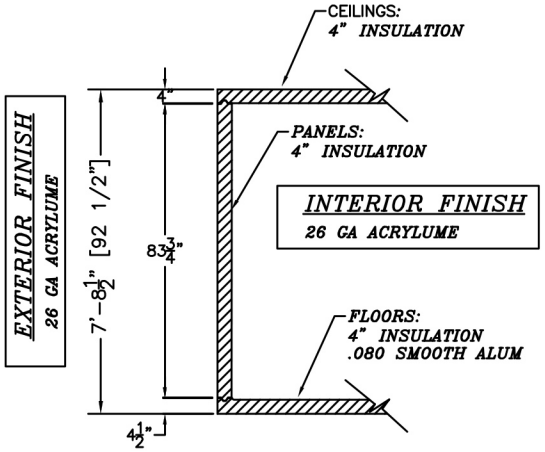

SECTION WALL WITH FLOOR

SCALE: 1/4"=1'–0"

PRODUCT SPECIFICATIONS	
MODEL:	BL1012–CF
INTERIOR/EXTERIOR FINISH	MILL EMB. ACRYLUME
INTERIOR FLOOR FINISH	SMOOTH ALUMINUM
COMPT ELECTRICAL (VOLTS/Hz/PH)	115/60/1
COMPT AMP.	0.8 Amp
REFRIG. SYSTEM ELECT (VOLTS/Hz/PH)	208–230/60/1
REFRIG. SYSTEM CONDENSING UNIT AMP.	15.0 Amp
REFRIG. SYSTEM EVAPORATOR UNIT AMP.	1.8 Amp
REFRIG. SYSTEM WEIGHT.	186 Lbs
TOTAL SHIP WGHT APPROX. (2 PALLETS)	1830 Lbs
TOTAL SHIP CUBIC FEET APPROX.	340 CuFt

CLASSIFIED UL NSF EISA Energy Independence & Security Act

Arctic®

WALK–IN COOLERS AND FREEZERS
BY ARCTIC INDUSTRIES INC.
9731 N.W. 114th WAY MIAMI FLORIDA 33178
PHONE: (305) 883–6881

GENERAL NOTE

NOTICE TO GENERAL CONTRACTOR AND SUB–CONTRACTOR. UNIT QUARRY TILE OR CONCRETE WEARING FLOORS, THE METAL FACINGS MAY BE SUS– CEPTIBLE TO STAINING DUE TO EXCESSIVE MOISTURE CREATED BY HYDRA–TION OF CONCRETE–TYPE MATERIALS. IT IS ESSENTIAL THAT EACH ROOM BE PROPERLY VENTILETED. SPECIAL PRECAUTIONS MUST BE TAKEN WHEN USING MURIATIC ACID DUE TO EFFECTS OF ACID FUMES ON ALUMINUM AND STAINLESS STEEL.
IN ADDITION, METAL SURFACES MUST BE PROTECTED FROM LIME AND OTHER CHEMICALS FOUND IN CONCRETE BY–PRODUCTS. PETROLEUM BASED PROTECTION MUST BE APPLIED BETWEEN CONCRETE AND THE METAL SURFACES. (LIQUID TAR, BRUSHED OR SPRAYED ABOVE THE CONCRETE CONTACT LINE, HEAVY EPOXY PAINT, 8 MIL POLYETHLYLENE H.D. BLACK DOUBLE LAYERED, 30 LB. ASPHALT IMPREGNATED ROOFING PAPER).

CONSTRUCTION

N.S.F. CONSTRUCTION

Project Name:
ARCTIC INDUSTRIES, INC
BLUE LINE

P.O#:

APPLICATION:
MODEL; BL1012–CF

NOTES:

FLOOR MUST BE LEVEL SMOOTH AND CLEAR OF OBSTRUCTIONS TO ACCEPT WALK–IN PANELS. ALSO, THERE MUST BE A MINIMUM OF 2" CLEARANCE AROUND ALL SIDES OF THE WALK–IN UNIT PROPER CIRCULATION.

VERIFY ALL DIMENSIONS AND SPECIFICATIONS BEUNITE APPROVING DRAWINGS

IMPORTANT: ALLOW 2 FEET CLEARANCE ABOVE UNIT TO REMOVE TOP PANEL AND TO ALLOW SERVICE ACCESS.

STRUCTURE MUST BE NOT MASKED TO BUILDING CEILING, BLOCKING AIR FLOW TO UNIT.

SIGNED APPROVED PRINT MUST BE REC'D. B/4 FAB.

☐ APPROVED AS DRAWN

SIGNED _____

DATE: _____

Drawn By: R.PUPO	Checked By: ARCTIC
Scale: NO TO SCALE	CREATED: 2014

DRW No: BL1012–CF

Blue Line

Walk In Coolers and Freezers by Arctic

TERMS & CONDITIONS- Blue Line

Please read this quotation carefully as it is based upon the information that has been provided to us for estimating purposes. The customer is responsible for reviewing this quotation for errors, omissions or any inaccurate dimensions. Our terms and conditions of sales are:

Pricing: Unless otherwise indicated, this is a firm written quotation subject to acceptance within 30 DAYS for delivery in 90 days.

Changes: Changes made by the purchaser after fabrication has begun shall be submitted in writing and purchaser agrees to pay the extra cost resulting from changes.

Refrigeration: Refrigeration is designed for normal holding temperature only at either Cooler (35 Degrees F) or Freezer (-10 Degrees F) at a 95 Degree ambient. Product load, location and usage can affect sizing. If you feel this is insufficient for your specific use, please advise your inside sales associate.

Ramps: Building inspectors in certain municipalities are now requiring ramps for walk-ins with step-up floors (not recessed). Ramps are quoted as an option, please add if needed. Check local codes before placing your order.

Terms & Taxes: Terms are subject to credit approval. Any balances due after the required payment date, will accrue interest at 1.5% per month. This price does not include state, federal, or local taxes which, if applicable, purchaser agrees to pay.

Local Codes: Arctic will not be responsible for any local codes or municipality laws that may affect the approval at the job site by the permitting authority.

Freight: All shipments are F.O.B., Miami, FL. 33178, unless otherwise noted. Freight estimates are subject to change at time of shipment due to increase in freight rates, fuel, surcharge, weight change or any unforeseen circumstances.

Claims: When Arctic coordinates shipping, the customer is responsible for evaluating the product at time of delivery to ensure that there is no damage. If the customer verifies damage, they are responsible to note on the carriers bill of lading before acceptance of shipment and notify Arctic immediately. If a shipment is relocated before it is inspected, no claim can be filed.

Restocking Policy: Stock orders which are cancelled or changed by our customer after they have been released for production, will be subject to a 25% restocking fee based on invoiced amount. Custom orders which are cancelled by our customers after they have been released for production will be subject to the total invoice amount.

Warranty: All Arctic Walk-In Coolers, Freezers and Refrigeration Equipment must be installed by a certified and licensed contractor with walk-in and/or refrigeration installation experience or product warranty will be void. See warranty certificates for complete coverage.

CONTACT US

A: 9731 NW 114th Way, Miami, Florida 33178

P: 1-800-325-0123 | 305-883-5581

E: sales@arcticwalkins.com **W:** arcticwalkins.com