ADCRAFT®
Admiral Craft Equipment Corp.

Date: _____
Item No.: _____
Project No.: _____

Specifications

Open Well Steam Tables
Electric - Hot Food, Stationary

Models:
☐ **ST-120/2 - 2 Bay**
☐ **ST-120/3 - 3 Bay**
☐ **ST-240/4 - 4 Bay**

Description
Adcraft's new open well steam tables are constructed of stainless steel with galvanized steel wells and adjustable legs. Available in three popular sizes; 2, 3 and 4 bay, these units are built to handle the toughest of kitchen environments. Each steam table features individually controlled 750W heating elements with their own dedicated control switch. The 8" deep wells are designed to fit full size spillage pans (not included). An adjustable stainless steel undershelf allows for storage. Each size comes with a 8" x 1/2" polycarbonate cutting board that runs the whole width of the unit and is removable for easy cleaning. All units come with Adcraft's 1 year limited warranty.

ST-120/2
model shown

Construction
- Heavy duty stainless steel body
- Die-stamped beading openings that measure 12" x 20"
- 8" x 1/2" polycarbonate cutting board that runs the whole width of the unit and is removable for easy cleaning
- Galvanized legs with adjustable bullet ends
- Adjustable stainless steel undershelf for storage

Controls
- Individually controlled infinite switches for each compartment
- Red indicator light that stays on while being used to let user know which compartments are heating

Heat Compartments
- 8" deep open wells that are lined with galvanized steel
- Each heat compartment is fully insulated on all four sides and bottom with 1" thick insulation

Electrical
- Each compartment has its own individually controlled 750W element
- 6' power cord with plug extends out from underneath the unit
- 2 and 3 bay models are 120V
- 4 bay model is 208V/240V

Accessories
- SPIL-21 - 21 qt. spillage pan

Certifications/Approvals
CE

Warranty: This product is protected by Admiral Craft Equipment Corporation's one year limited warranty. Should your product fail under normal use it will be repaired or replaced up to one year from date of purchase.

Admiral Craft Equipment Corp.
940 South Oyster Bay Rd. • Hicksville, NY 11801 • P: 800-223-7750 • F: 800-447-7751 • www.admiralcraft.com

Admiral Craft Equipment Corp.

Date: _____

Item No.: _____

Project No.: _____

Open Well Steam Tables - Electric - Hot Food, Stationary

Plan View

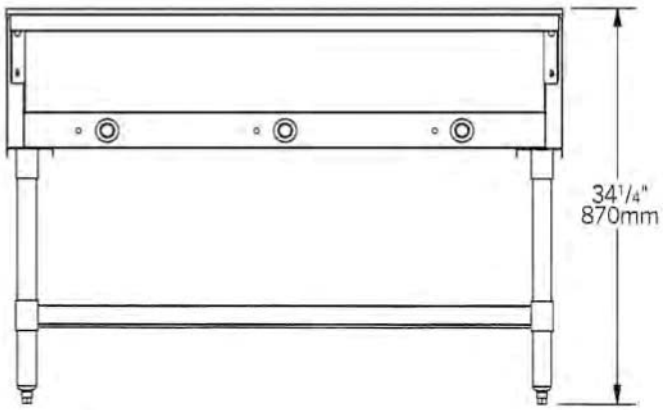

FRONT VIEW

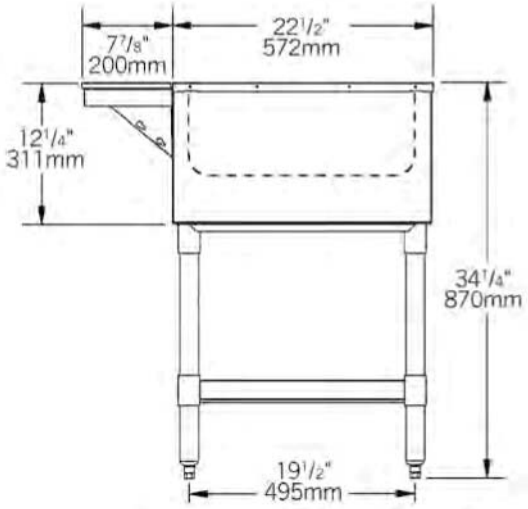

SIDE VIEW

Specifications

Item Number	Well Openings	Volts	Wattage	Amps	NEMA Plug
ST-120/2	2	120V	1500W	12.5	5-15P
ST-120/3	3	120V	2250W	18.75	5-20P
ST-240/4	4	208V/240V	3000W	12.5	6-20P

Shipping Info

Item Number	Dimensions	Gross Weight	Net Weight
ST-120/2	33"W x 31"D x 34.25"H	89.5 lbs	82.5 lbs
ST-120/3	48.5"W x 31"D x 34.25"H	112.5 lbs	104.75 lbs
ST-240/4	63.75" x 31"D x 34.25"H	141 lbs	130 lbs

For more information about this or any of our other products go to www.admiralcraft.com. This item is listed on AutoQuotes. For full explanation of warranty coverage on this product please refer to warranty page located in the owner's manual and warranty section at www.admiralcraft.com. Specifications subject to change without notice. Please confirm at time of order.

©2013 Admiral Craft Equipment Corp.

Admiral Craft Equipment Corp.

940 South Oyster Bay Rd. • Hicksville, NY 11801 • P: 800-223-7750 • F: 800-447-7751 • www.admiralcraft.com