IMPERIAL®

Model Numbers
IMGA-2428
IMGA-3628
IMGA-4828
IMGA-2428-1
IMGA-3628-1
IMGA-4828-1
IMGA-6028-1
IMGA-7228-1

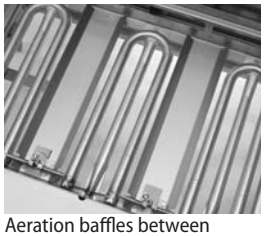

Aeration baffles between burners spread heat across the griddle plate for even heating.

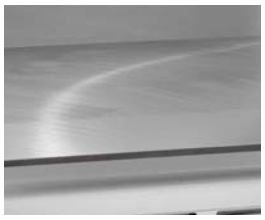

Thick highly polished steel griddle plate maintains selected temperatures.

Full width rear flue distributes heat uniformly across the griddle surface.

Stainless steel grease gutter and 1 gal. (3.8 L) grease can.

IMGA-3628 shown

BURNERS - Each manually controlled griddle burner is rated at 30,000 BTU (9KW).
- Each burner has an adjustable gas valve and continuous pilot for instant ignition.
- Aeration baffles between burners spread the heat evenly across the entire griddle surface.
- Burners are located every 12" (305 mm).

GRIDDLE PLATE - Thick, highly polished steel plate holds temperature and has a quick recovery.
- Two plate thickness available, 3/4" (19 mm) and 1" (25 mm) for models with (-1) suffix.
- Full 24" (610 mm) plate depth for more cooking surface.
- Surface is ideal for a large range of menu items.
- Optional chrome and grooved griddle top are available as an option.

GREASE MAINTENANCE - Stainless steel grease gutter is 4" (102 mm) wide.
- Large 1 gal (3.8 L) capacity grease can has a weep hole to indicate when full.
- Grease can removes easily.

EXTERIOR - Stainless steel front, sides, splash guard, and ledge.
- Stainless steel ledge is one piece rolled for cleaning convenience.
- Range match profile when placed on a refrigerated base or equipment stand.
- Control knobs are cast aluminum with a vylox heat protection grip.
- 4" (102 mm) stainless steel legs are included.
- One year parts and labor warranty.

IMPERIAL®

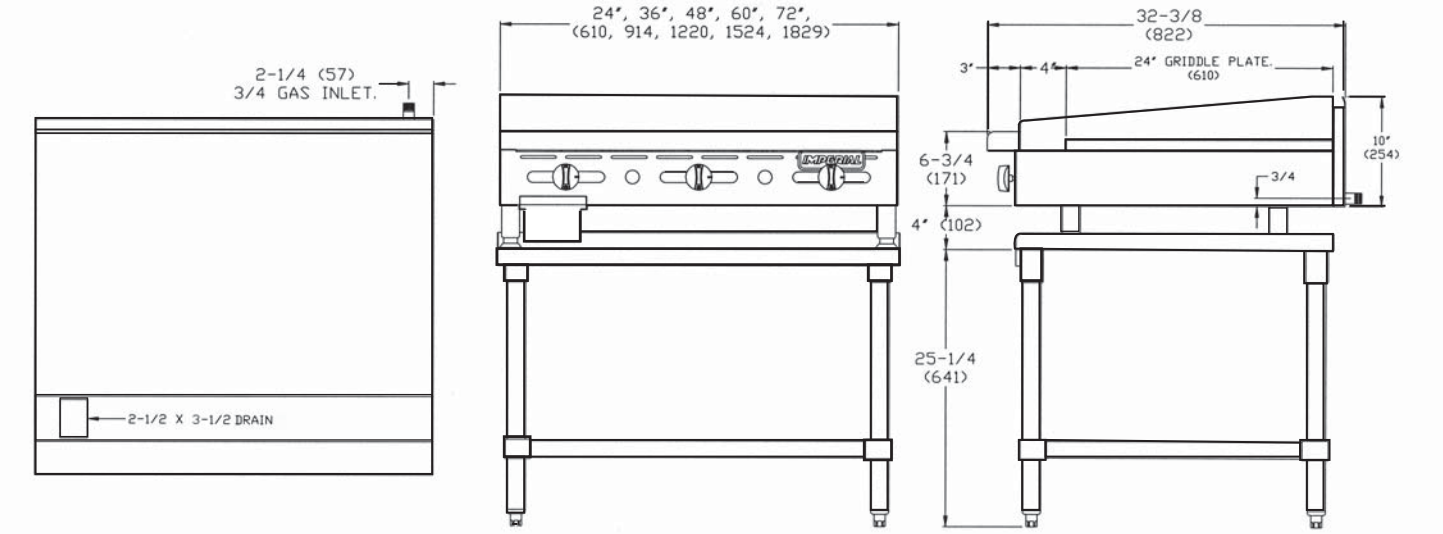

MANUALLY CONTROLLED GRIDDLES

MODEL	WIDTH	NUMBER OF BURNERS	GAS OUTPUT BTU	(KW)	SHIP WEIGHT (KG)	LBS
3/4" (19 MM) HIGHLY POLISHED PLATE						
IMGA-2428	24" (610 mm)	2	60,000	(18)	(91)	200
IMGA-3628	36" (914 mm)	3	90,000	(26)	(138)	305
IMGA-4828	48" (1219 mm)	4	120,000	(35)	(163)	360
1" (25 MM) HIGHLY POLISHED PLATE						
IMGA-2428-1	24" (610 mm)	2	60,000	(18)	(116)	255
IMGA-3628-1	36" (914 mm)	3	90,000	(26)	(172)	380
IMGA-4828-1	48" (1219 mm)	4	120,000	(35)	(193)	425
IMGA-6028-1	60" (1524 mm)	5	150,000	(44)	(245)	540
IMGA-7228-1	72" (1829 mm)	6	180,000	(53)	(290)	640

Measurements in ( ) are metric equivalents.

MODEL	GRIDDLE PLATE DIMENSIONS	DIMENSIONS	CRATED DIMENSIONS
IMGA-2428	24" w x 24" d (610 x 610 mm)	24" w x 32-3/8" d x 14" h (610 x 822 x 356 mm)	26-1/2" w x 36" d x 16-1/2" h (673 x 914 x 419 mm)
IMGA-3628	36" w x 24" d (914 x 610 mm)	36" w x 32-3/8" d x 14" h (914 x 822 x 356 mm)	38-1/2" w x 36" d x 16-1/2" h (978 x 914 x 419 mm)
IMGA-4828	48" w x 24" d (1219 x 610 mm)	48" w x 32-3/8" d x 14" h (1219 x 822 x 356 mm)	50-1/2" w x 36" d x 16-1/2" h (1283 x 914 x 419 mm)
IMGA-2428-1	24" w x 24" d (610 x 610 mm)	24" w x 32-3/8" d x 14" h (610 x 822 x 356 mm)	26-1/2" w x 36" d x 16-1/2" h (673 x 914 x 419 mm)
IMGA-3628-1	36" w x 24" d (914 x 610 mm)	36" w x 32-3/8" d x 14" h (914 x 822 x 356 mm)	38-1/2" w x 36" d x 16-1/2" h (978 x 914 x 419 mm)
IMGA-4828-1	48" w x 24" d (1219 x 610 mm)	48" w x 32-3/8" d x 14" h (1219 x 822 x 356 mm)	50-1/2" w x 36" d x 16-1/2" h (1283 x 914 x 419 mm)
IMGA-6028-1	60" w x 24" d (1524 x 610 mm)	60" w x 32-3/8" d x 14" h (1524 x 822 x 356 mm)	62-1/2" w x 36" d x 16-1/2" h (1588 x 914 x 419 mm)
IMGA-7228-1	72" w x 24" d (1829 x 610 mm)	72" w x 32-3/8" d x 14" h (1829 x 822 x 356 mm)	74-1/2" w x 36" d x16-1/2" h (1892 x 914 x 419 mm)

MANIFOLD PRESSURE NATURAL GAS	MANIFOLD PRESSURE PROPANE GAS	MANIFOLD SIZE
5.0" W.C.	10.0" W.C.	3/4" (19 mm)

Specify elevation, if over 2,000 ft.

CLEARANCE REQUIREMENTS

For use only on non-combustible surfaces. Provide 0" clearance from non-combustible surfaces and 6" (152 mm) from combustible surfaces.

OPTIONS AND ACCESSORIES

- Stainless steel equipment stands
- 6" (152 mm) casters for equipment stands
- Open burners available, set of 2 burners, add 12" (305 mm) to width and "OB-2" to model number)
- Open burners available, set of 4 burners, add 24" (610 mm) to width and "OB-4" to model number)
- 5" (127 mm) deep, stainless steel front landing ledge
- 7" (178 mm) deep, stainless steel front landing ledge
- Chrome griddle top, (add "-CG" to model number)
- Grooved griddle top, (add "-GG" to model number)
- Extra grease can

IMPERIAL®
1128 Sherborn Street Corona, CA 92879
800.343.7790 Ph: 951.281.1830 Fx: 951.281.1879
www.imperialrange.com
E-mail: imperialsales@imperialrange.com

© 2013 Imperial Commercial Cooking Equipment
Printed in the U.S.A.
Imperial reserves the right to change specifications at any time without prior notice and without any obligation for past or future equipment purchases. Visit www.imperialrange.com for specification updates.